2026

SPARE PARTS CATALOGUE

SUSPENSION-LAB.COM

ONLINE-SHOP

Overview

DVO Spare Parts

Forks / Federgabeln

Onyx 38 | D1-D2-D3-WP OTT/SL | Spare Parts	3
Onyx DC | Spare Parts	5
Onyx SC | D1-E1 | Spare Parts	6
Onyx SC | D2-E2 | Spare Parts	7
Diamond 36 | D1 SL | Spare Parts	8
Diamond | D1-E1 Boost | Spare Parts	9
Diamond | D2-E2 Beryl Boost | Spare Parts	10
Diamond | D3-E3 | Spare Parts	11
Sapphire | D1 | Spare Parts	12

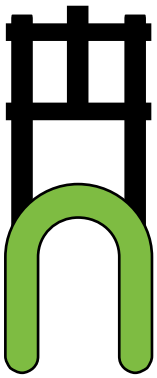

Shocks / Dämpfer

Jade | Spare Parts	13
Jade X | Spare Parts	14
Jade X WP | Spare Parts	15
Topaz | Spare Parts	16
Topaz WP | Spare Parts	18
Topaz Gen3 | Spare Parts	19

***Suspension Lab** is your DVO Distributor for Germany, Austria & Czechia.*

If you have any questions or issues please get in contact with us via:
dvo@suspension-lab.com or +43 929 1122

For warranty cases you can use our online warranty form

Copyright © 2026

Onyx 38 | D1-D2-D3-WP OTT/SL | Spare Parts

ONLINE-SHOP

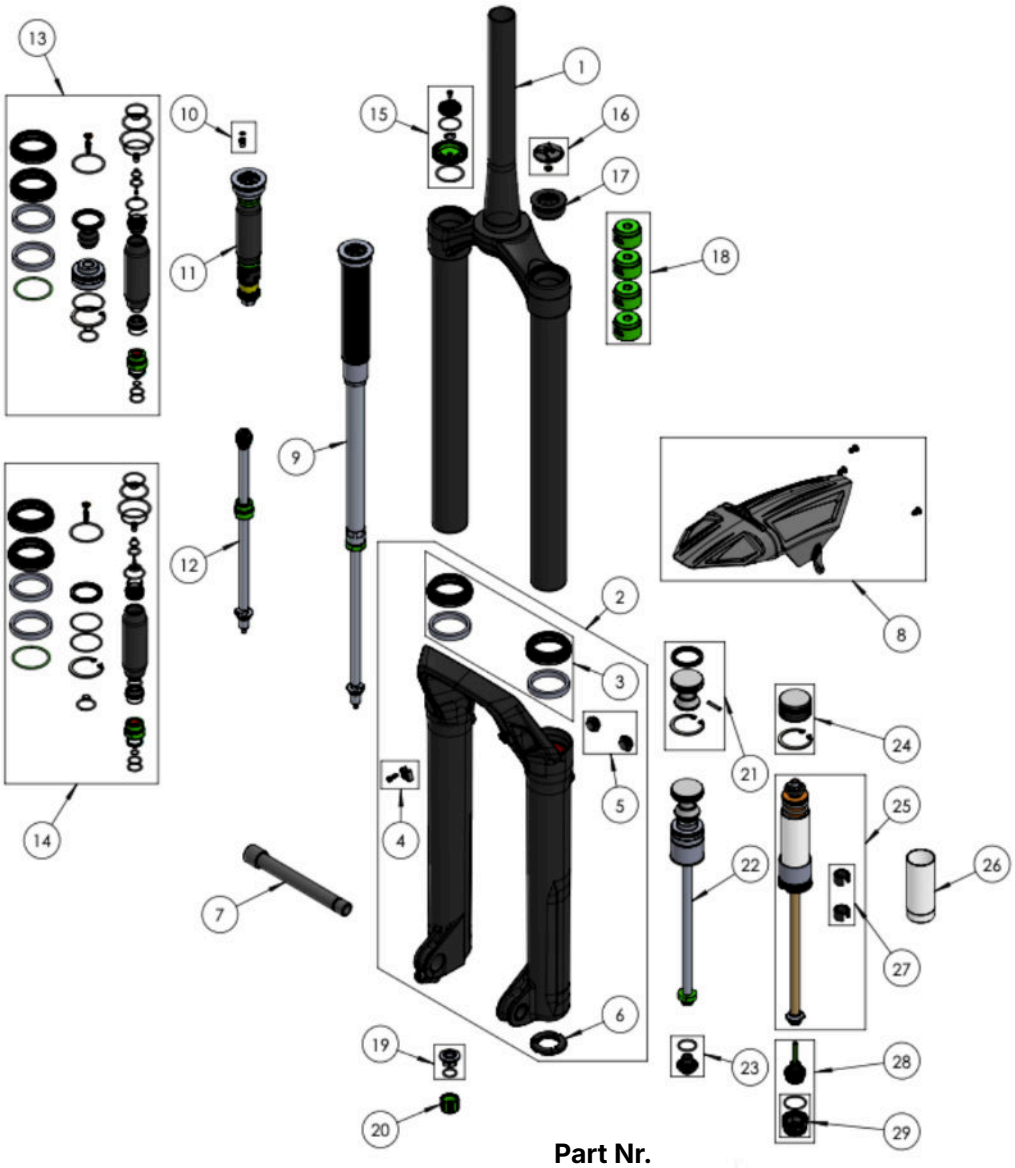

Spare Parts List | 1/2

	Product Name	Part Nr.
1	Upper Assembly Black - Onyx 38	241-9001-SP
1	Upper Assembly Black - Onyx 38 Large Crown	243-9001-SP
2	Bottom Case Assembly - D1 Black - Onyx 38	241-SP07-YS728
2	Bottom Case Assembly - D1 Green - Onyx 38	241-SP07-TC704
2	Bottom Case Assembly - D1 Grey - Onyx 38	241-SP07-PPU25-01
2	Bottom Case Assembly - D2 Black - Onyx 38	243-SP03-YS728
2	Bottom Case Assembly - D2 Green - Onyx 38	243-SP03-TC704
2	Bottom Case Assembly - D2 Grey - Onyx 38	243-SP03-PPU25-01
2	Bottom Case Assembly - D3 Black - Onyx 38	244-SP07-YS728
2	Bottom Case Assembly - D3 Green - Onyx 38	244-SP07-TC704
2	Bottom Case Assembly - D3 Grey - Onyx 38	244-SP07-PPU25-01
2	Bottom Case Assembly - Onyx 38 WP	259-WP01
3	Seal Kit - Onyx 38	241-SP01
4	Cable Guide Kit - Onyx 38	241-1087-SP
5	Bleeder Plug Assembly - Onyx 38	241-9013-SP
5	Bleeder Plug Assembly - Onyx 38 WP	241-9013-10-WP
6	Bottom Out Bumper - Onyx 38	241-1081-SP
7	Stepped Axle - Onyx 38	241-1003-SP
8	Fender Kit - Onyx 38	241-9007-SP
9	D1 Damper Cartridge - Onyx 38	241-9004-SP
9	D2 Damper Cartridge - Onyx 38	243-9004-SP
9	Damper Cartridge - Onyx 38 WP	259-9004-WP
9	D3 Damper Cartridge - Onyx 38	244-SP01
10	Damper Plug Kit	1569015
v		

SUSPENSION-LAB.COM
Copyright © 2026

Spare Parts List | 2/2

^	Product Name	Part Nr.
11	D1 Compression Assembly - Onyx 38	272-9002-SP
11	D2 Compression Assembly - Onyx 38	243-9002-SP
11	Compression Assembly - Onyx 38 WP	259-9003-WP
12	Rebound Assembly - Onyx 38	241-9003-SP
12	Rebound Assembly - Onyx 38 WP	241-9003-WP
13	D1 SL Complete Service Kit - Onyx 38	241-SP02
13	D2 SL Complete Service Kit - Onyx 38	243-SP01
13	D3 SL Complete Service Kit - Onyx 38	244-SP04
13	SL Complete Service Kit - Onyx 38 WP	259-WP03
14	D1 OTT Complete Service Kit - Onyx 38	242-SP02
14	D2 OTT Complete Service Kit - Onyx 38	243-SP02
14	OTT Complete Service Kit - Onyx 38 WP	259-WP04
15	D1 Damper Compression Knobs Kit- Onyx 38 / Diamond 36	241-9008-SP
15	D2 Damper Compression Knobs Kit- Onyx 38	243-9008-SP
15	D3 Compression Knob	244-SP02
15	Damper Compression Knobs Kit- Onyx 38 WP	259-9012-WP
16	Air Cap Kit - Onyx 38 D1-D2 / Diamond 36	241-SP06
16	Air Cap Kit - Jade X, Topaz, Onyx 38 D3	205-9021
16	Air Cap Kit - Onyx 38 WP	259-WP02
17	Air Top Cap Assembly - Onyx 38 D1-D2	241-SP05
17	Air Top Cap Assembly - Onyx 38 D3	244-SP03
18	Air Volume Reducer Kit (4) 10cc each	241-SP09
19	Rebound Foot Nut - Onyx 38 / Diamond 36	241-SP03
20	Rebound Knob - Onyx 38 / Diamond 36	241-1037-SP
20	Rebound Knob - Onyx 38 WP	241-1037-10-WP
21	SL Air Piston Kit - Onyx 38	241-SP08
22	SL Air Shaft Assembly - 160mm - Onyx 38	241-9010-160-SP
22	SL Air Shaft Assembly - 170mm - Onyx 38	241-9010-170-SP
22	SL Air Shaft Assembly - 180mm - Onyx 38	241-9010-180-SP
23	SL Foot Nut - Onyx 38 / Diamond 36	241-SP04
24	OTT Air Piston Kit - Onyx 38	242-9008-SP
25	OTT Air Shaft Assembly 160-180mm - Onyx 38	242-9007-SP
25	OTT Air Shaft Assembly - Onyx 38 WP	261-9007-WP
26	OTT Spring Guide Kit - Onyx	1669020
27	OTT Travel Reduction Kit	1439017
27	Travel Reduction - Onyx 38 WP	1431067-SP
28	OTT Foot Nut and OTT Cap - Onyx 38	242-SP03
28	OTT Foot Nut and OTT Cap - Onyx 38 WP	261-WP01
29	OTT Cap Assembly	242-SP01

SUSPENSION-LAB.COM
Copyright © 2026

Onyx DC | Spare Parts

ONLINE-SHOP

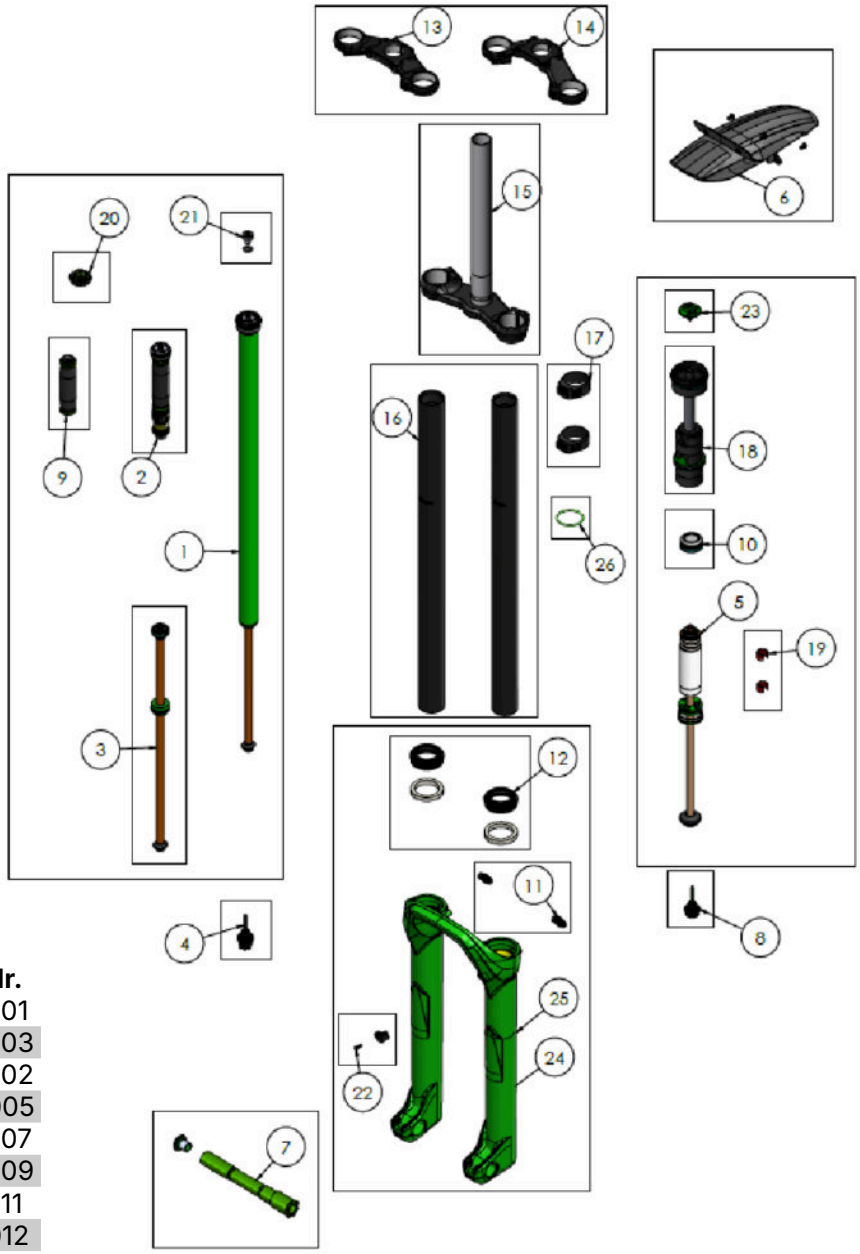

Spare Parts List | 1/1

	Product Name	Part Nr.
1	Damper Complete - Onyx DC	1659001
2	Comp Assembly - Onyx DC	1659003
3	Rebound Assembly - Onyx DC	1659002
4	Rebound Foot Nut Assembly	1439005
5	Air Shaft Assembly 275	1659007
6	Fender Kit Onyx DC	1659009
7	Axle 110×20 Boost	1659011
8	Air Spring Foot Nut Assembly	1439012
9	Bladder Kit - Onyx	1669006
10	Air Piston Kit - Onyx DC	1659016
11	Air Bleeders	1659013

		Part Nr.
12	Seal Kit Onyx 36mm	1669010
13	Upper Crown 5mm Drop	1659006
14	Upper Crown 22mm Drop	1659015
15	Lower Crown + 1 1/8 steer - Onyx DC	1659004
16	Stanchion Tube - Onyx DC	1651002
17	Frame Bumpers - Onyx DC	1651012
18	Air Volume Assembly - Onyx DC	1659008
19	OTT Travel Reduction Kit	1439017
20	Damper Knob & Detent Kit - Onyx DC	1659018
21	Bleed Screw & O-Ring	1439019
22	Cable Guide & Screw	1439020
23	Air Cap 2021 - Black	213-9021
24	Bottom Case Assembly 275 - Green 2019 - Onyx DC	1659000-TC704-x3
24	Bottom Case Assembly 275 - Black 2019 - Onyx DC	1659000-YS727-X3
24	Bottom Case Assembly 275 - Blue 2019 - Onyx DC	1659000-YS9429
25	Bottom Case Assembly 29 - Green 2019 - Onyx DC	195-9000-TC704
25	Bottom Case Assembly 29 - Black 2019 - Onyx DC	195-9000-YS727

SUSPENSION-LAB.COM
Copyright © 2026

Onyx SC | D1-E1 | Spare Parts

ONLINE-SHOP

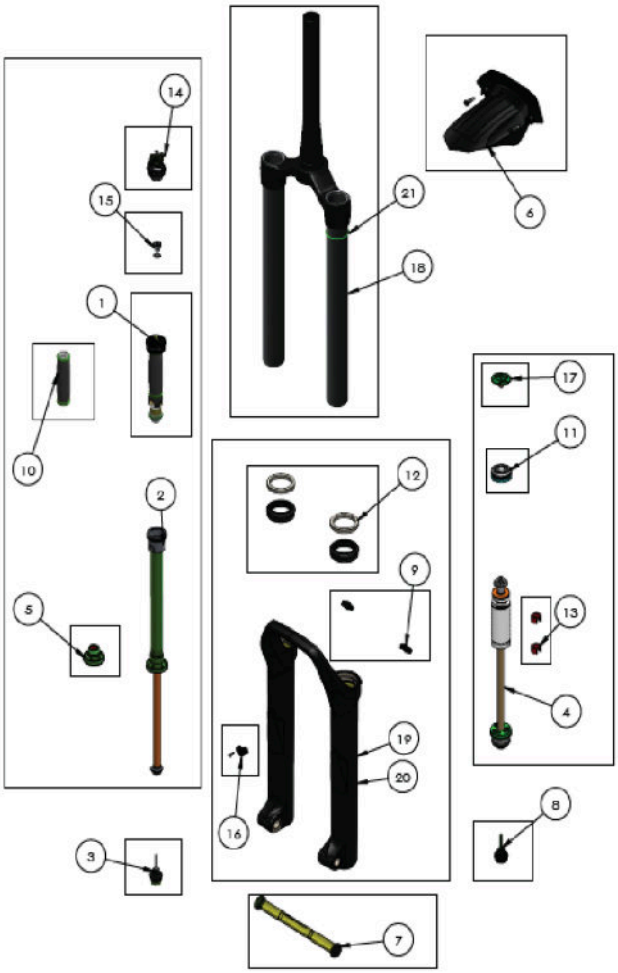

Spare Parts List | 1/1

	Product Name	Part Nr.
1	Comp Assembly 2019 (w. 1879018 Knob Kit)	1669003
1	Comp Assembly 2022 (w. 222-9004 Knob Kit) - Onyx SC D1-E1	1669003-X6
2	Rebound Assembly - Onyx	1669002
3	Rebound Foot Nut Assembly	1439005
4	Air Shaft Assembly 275/29 - Onyx SC D1-E1	1669007-160
5	Damper End Cap - Onyx SC D1-E1	1669005
6	Fender Kit	1669009
7	Bolted Axle 110×15 - Onyx SC 36 / Diamond 36	1669011F
8	Air Spring Foot Nut Assembly	1439012
9	Air Bleeders Onyx SC/DC & Diamond 36	1659013
10	Bladder Kit - Onyx	1669006
11	Air Piston Kit Onyx SC	1669008
12	Seal Kit Onyx 36mm	1669010
13	OTT Travel Reduction Kit	1439017
14	Damper Knob & Detent Kit 2022 - Onyx SC D1-E1	222-9004
15	Bleed Screw & O-Ring	1439019
16	Cable Guide & Screw	1439020
17	Air Cap 2022 - Black	213-9021
18	Upper Assembly Black (Replaces 1669001-YS728M)	1669014
19	Bottom Case Assembly 275 - Green 2022 - Onyx SC D1	1669000-TC704
19	Bottom Case Assembly 275 - Black 2022 - Onyx SC D1	1669000-YS727
19	Bottom Case Assembly 275 - Blue 2022 - Onyx SC D1	1669000-YS9429
19	Bottom Case Assembly 29 - Green 2022 - Onyx SC D1	1669004-TC704
19	Bottom Case Assembly 29 - Black 2022 - Onyx SC D1	1669004-YS727
19	Bottom Case Assembly 29 - Blue 2022 - Onyx SC D1	1669004-YS9429
20	Bottom Case Assembly 275 - Black 2022 - Onyx SC E1	196-9000-YS727
20	Bottom Case Assembly 29 - Black 2022 - Onyx SC E1	197-9000-YS727
21	Travel O-Ring Indicator - 36mm	1661093

SUSPENSION-LAB.COM
Copyright © 2026

Onyx SC | D2-E2 | Spare Parts

ONLINE-SHOP

Spare Parts List | 1/1

	Product Name	Part Nr.
1	Upper Assembly Black (Replaces 1669001-YS728M)	1669014
2	Travel O-Ring Indicator - 36mm	1661093
3	Fender Kit	1669009
4	Seal Kit Onyx 36mm	1669010
5	Air Bleeders Onyx SC/DC & Diamond 36	1659013
6	Cable Guide & Screw	1439020
7	Bottom Case Assembly 29 - Black 2022 - Onyx SC D2	1669004-10-YS727
7	Bottom Case Assembly 29 - Black 2022 - Onyx SC E2	197-9000-10-YS727
8	D2 Compression Assembly - Onyx SC D2	217-9003
9	Rebound Assembly - Onyx	1669002
10	Rebound Foot Nut Assembly	1439005
11	Air Cap 2022 - Black	213-9021
12	Air Top Plug Assembly w. Air Cap	1669013
13	Air Piston Kit - Onyx SC D2	217-9008
14	Air Shaft Assembly - Onyx SC D2	217-9007-X2
15	Air Spring Footnut D2	1789012
16	Bolted Axle 110×15 - Onyx SC 36 / Diamond 36	1669011F

SUSPENSION-LAB.COM
Copyright © 2026

Diamond 36 | D1 SL | Spare Parts

ONLINE-SHOP

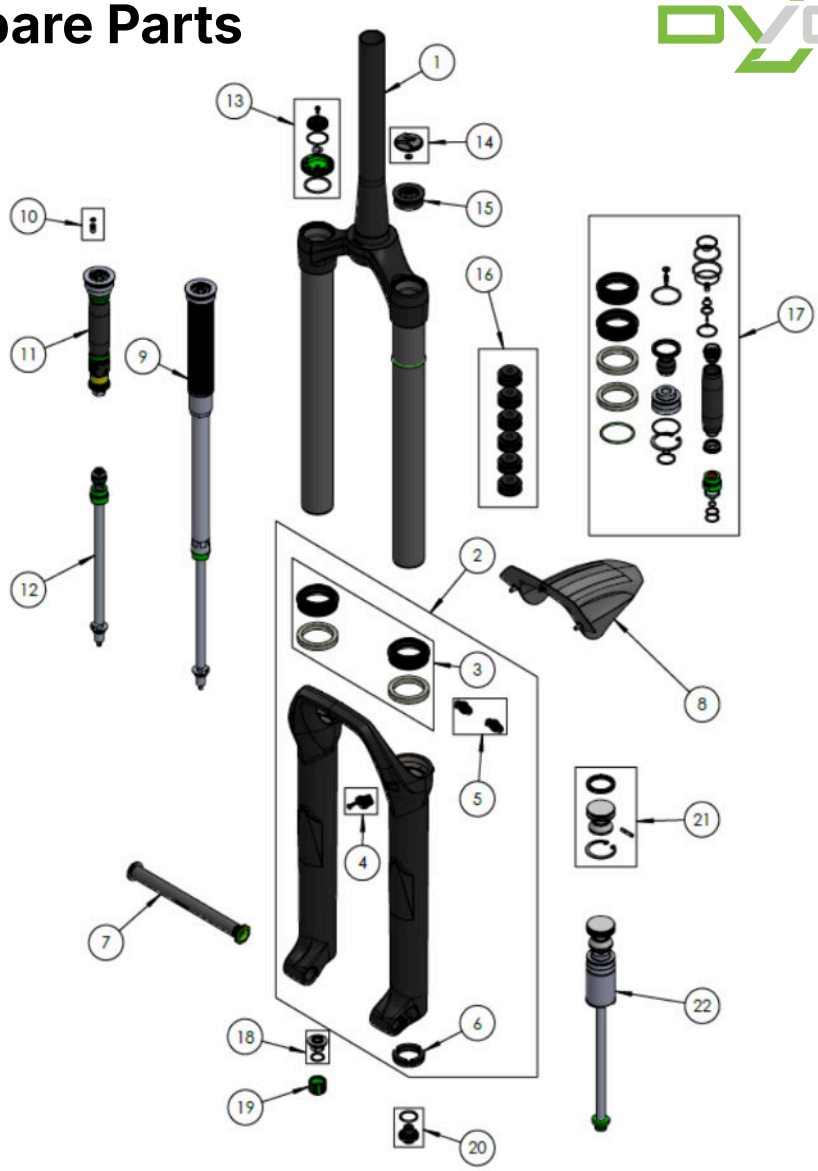

Spare Parts List | 1/1

	Product Name	Part Nr.
1	Upper Assembly Black - Diamond D1 SL	249-9001-SP
2	Bottom Case Assembly - Grey - Diamond D1 SL	249-9000-PPU25-01
2	Bottom Case Assembly - Green - Diamond D1 SL	249-9000-TC704
2	Bottom Case Assembly - Black - Diamond D1 SL	249-9000-YS728
3	Seal Kit Onyx SC/DC & Diamond 36mm	1669010
4	Cable Guide & Screw	1439020
5	Air Bleeders Onyx SC/DC & Diamond 36	1659013
6	Bottom Out Bumper - Diamond D1 SL	249-1081-SP
7	Bolted Axle 110×15 - Onyx SC 36 / Diamond 36	1669011F
8	Fender Kit	1669009
9	Damper Cartridge - Diamond D1 SL	249-9004-SP
10	Damper Plug Kit	1569015
11	Compression Assembly - Diamond D1 SL	273-9002-SP
12	Rebound Assembly - Diamond D1 SL	249-9003-SP
13	D1 Damper Compression Knobs Kit- Onyx 38 / Diamond 36	241-9008-SP
14	Air Cap Kit - Onyx 38 D1-D2 / Diamond 36	241-SP06
15	Air Top Cap Assemby - Diamond D1 SL	249-9011-SP
16	Air Volume Reducer Kit (6) 5cc each	249-SP02
17	Complete Service Kit - Diamond D1 SL	249-SP01
18	Rebound Foot Nut - Onyx 38 / Diamond 36	241-SP03
19	Rebound Knob - Onyx 38 / Diamond 36	241-1037-SP
20	SL Foot Nut - Onyx 38 / Diamond 36	241-SP04
21	SL Air Piston Kit - Diamond D1 SL	249-SP03
22	SL Air Shaft Assembly 140mm - Diamond D1 SL	249-9012-140-SP
22	SL Air Shaft Assembly 150mm - Diamond D1 SL	249-9012-150-SP
22	SL Air Shaft Assembly 160mm - Diamond D1 SL	249-9012-160-SP

SUSPENSION-LAB.COM
Copyright © 2026

Diamond | D1-E1 Boost | Spare Parts

ONLINE-SHOP

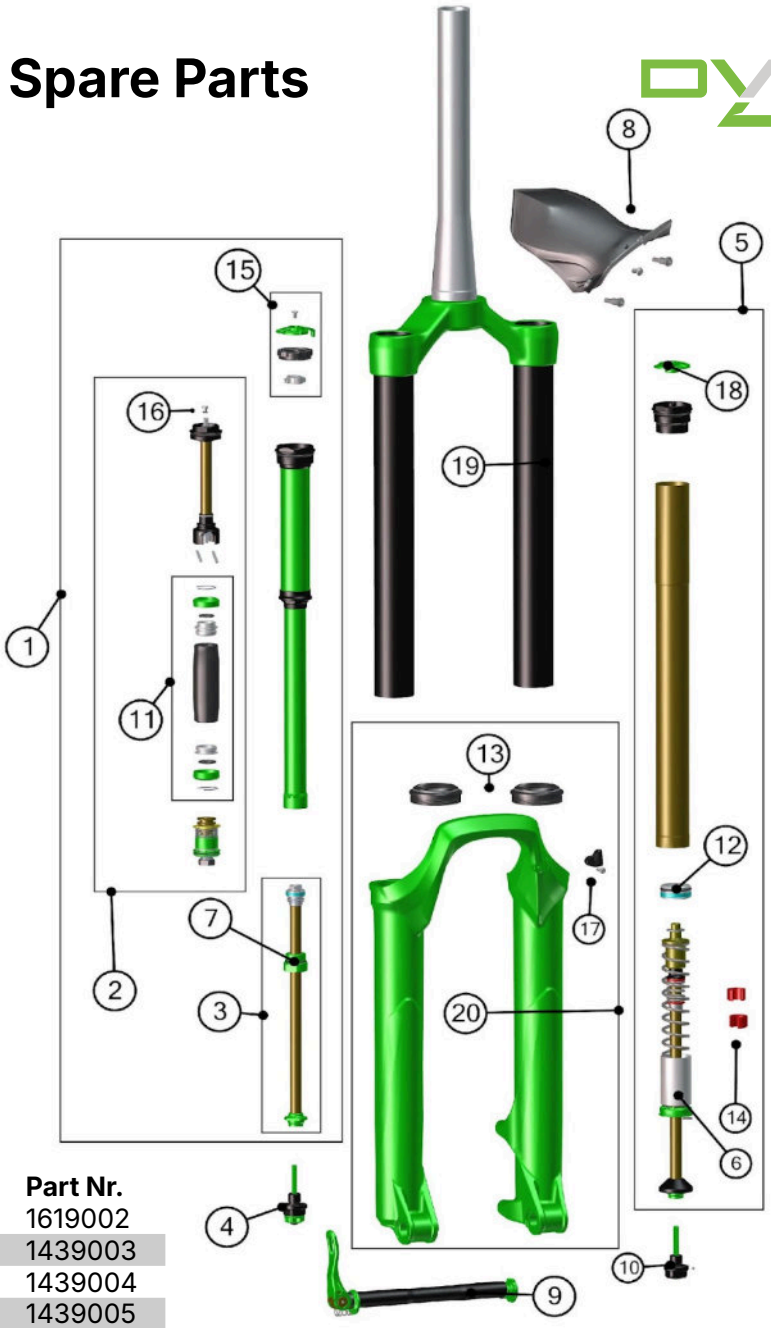

Spare Parts List | 1/1

	Product Name	Part Nr.
1	Damper Complete - Diamond D1-E1 Boost	1619002
2	Comp Assembly - Diamond D1-E1 Boost	1439003
3	Rebound Assembly - Diamond	1439004
4	Rebound Footnut Assy	1439005
5	Air Cartridge Complete 275	1619006
5	Air Cartridge Complete 29	1629006
6	Air Shaft Assembly 275	1619007
6	Air Shaft Assembly 29	1629007
7	Damper End Cap	1439008
8	Fender Kit Boost	1619009
9	QR Axle 110×15	1619011

		Part Nr.
9	Bolted Axle 110×15	1789011
10	Air Spring Foot Nut Assembly	1439012
11	Bladder Kit - Diamond/Sapphire	1439013
12	Air Piston Kit - Diamond D1-E1 Boost	1439015
13	Seal Kit 35mm	1439016
14	OTT Travel Reduction Kit	1439017
15	Damper Knob + Detent Kit - Diamond D1-E1 Boost	1439018
16	Bleed Screw & O-Ring	1439019
17	Cable Guide & Screw	1439020
18	Air Cap 2022 - Black	213-9021
19	Upper Assembly Black 44/51mm 2019	1619001-YS-728M
19	Upper Assembly Black 37/44mm 2019	1619001-YS-728M-12
20	Bottom Case Assy 275 - Green 2022 - Diamond D1-E1 Boost	1619000-TC704-X2
20	Bottom Case Assy 275 - Black 2022 - Diamond D1-E1 Boost	1619000-YS727-X2
20	Bottom Case Assy 275 - Blue 2022 - Diamond D1-E1 Boost	1619000-YS9429-X2
20	Bottom Case Assy 29 - Green 2022 - Diamond D1-E1 Boost	1629000-TC704-X2
20	Bottom Case Assy 29 - Black 2022 - Diamond D1-E1 Boost	1629000-YS727-X2
20	Bottom Case Assy 29 - Blue 2022 - Diamond D1-E1 Boost	1629000-YS9429-X2

SUSPENSION-LAB.COM
Copyright © 2026

Diamond | D2-E2 Beryl Boost | Spare Parts

ONLINE-SHOP

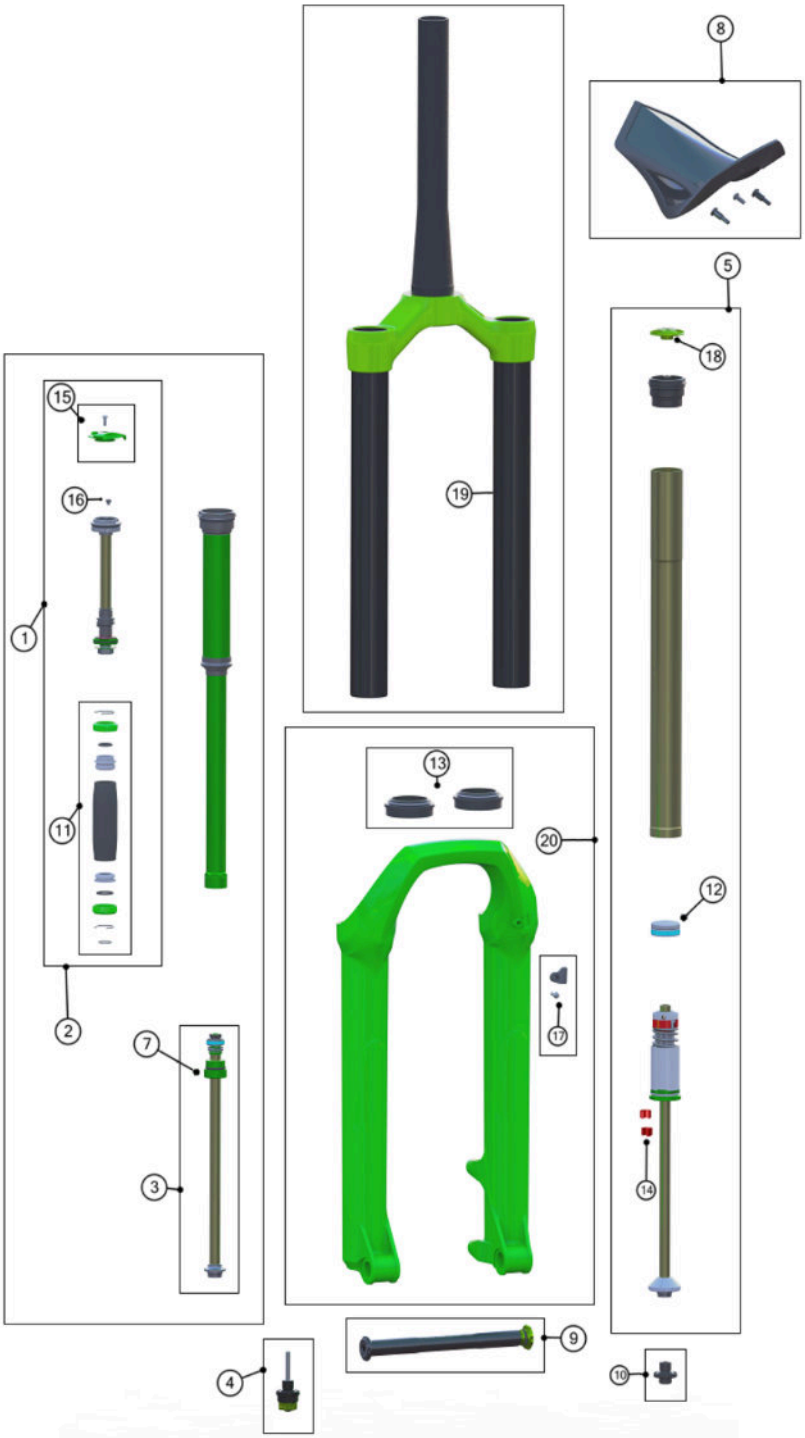

Spare Parts List | 1/1

	Product Name	Part Nr.
1	Damper Complete Beryl	1789002
2	Comp Assembly Beryl	1789003
3	Rebound Assembly	1439004
4	Rebound Foot Nut Assembly	1439005
5	Air Cartridge Complete 275	1789006
5	Air Cartridge Complete 29	1799006
6	Air Shaft Assembly 275	1789007
6	Air Shaft Assembly 29	1799007
7	Damper End Cap	1439008
8	Fender Kit Boost	1619009
9	Bolted Axle 110×15	1789011

		Part Nr.
10	Air Spring Footnut D2	1789012
11	Bladder Kit - Diamond/Sapphire	1439013
12	Air Piston Kit - Diamond Beryl	1789015
13	Seal Kit 35mm	1439016
14	OTT Preload Clip - Diamond D2	1789022
15	Damper Knob & Detent Kit - Diamond D2-E2/Beryl Boost	1789018
16	Bleed Screw & O-Ring	1439019
17	Cable Guide & Screw	1439020
18	Air cap 2022 - Black	213-9021
19	Upper Assembly Black 44/51mm 2019	1619001-YS-728M
20	Bottom Case Assembly 275 - Black 2022 - Diamond D2	1789000-YS727-X2
20	Bottom Case Assembly 29 - Black 2022 - Diamond D2	1799000-YS727-X2
	Travel O-Ring Indicator - 35mm	1431093

SUSPENSION-LAB.COM
Copyright © 2026

Diamond | D3-E3 | Spare Parts

ONLINE-SHOP

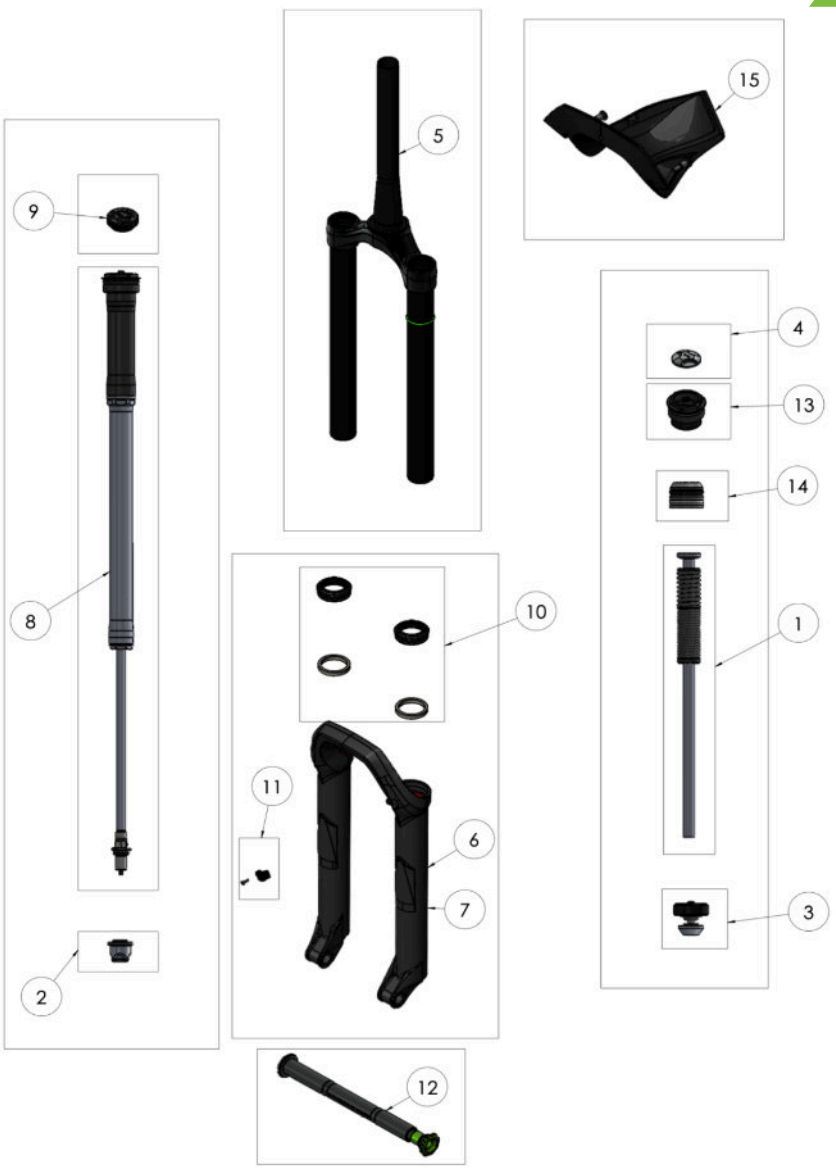

Spare Parts List | 1/1

	Product Name	Part Nr.
1	Air Shaft Assembly - 140mm - Diamond D3-E3	212-9006-140
1	Air Shaft Assembly - 150mm - Diamond D3-E3	212-9006-150
1	Air Shaft Assembly - 160mm - Diamond D3-E3	212-9006-160
2	Damper Footnut + Knob kit - Green - Diamond D3	211-9005-JY012-SP
2	Damper Footnut + Knob Kit - Grey - Diamond D3	211-9005-JY024-SP
3	Air Spring Footnut kit - Diamond D3	211-9007
4	Air Cap - Grey - Diamond D3	211-9004-JY012
4	Air Cap - Green - Diamond D3	211-9004-JY024
5	Crown Steer Assembly - Black - Diamond D3	211-9001
6	Bottom Case Assembly 275 - Green 2021 - Diamond D3	211-9000-TC704-X2
6	Bottom Case Assembly 275 - Black 2021 - Diamond D3	211-9000-YS27-X2
6	Bottom Case Assembly 29 - Green 2021 - Diamond D3	212-9000-TC704-X2
6	Bottom Case Assembly 29 - Black 2021 - Diamond D3	212-9000-YS727-X2
7	Bottom Case Assembly 29 - Green 2021 - Diamond E3	199-9000-20-TC704-X2
7	Bottom Case Assembly 29 - Black 2021 - Diamond E3	199-9000-20-YS727-X2
8	Damper Cartridge Kit - Diamond D3-E3	211-9010
9	Compression Knob Kit - Diamond D3-E3	211-9009
10	Seal Kit 35mm	1439016
11	Cable Guide & Screw	1439020
12	Bolted Axle 110×15	1789011
13	Air Top Cap Assembly + Volume Spacer Kit - Diamond D3-E3	211-9003
14	Air Piston Kit - Diamond D3-E3	211-9008
15	Fender Kit Boost	1619009

SUSPENSION-LAB.COM
Copyright © 2026

Sapphire | D1 | Spare Parts

ONLINE-SHOP

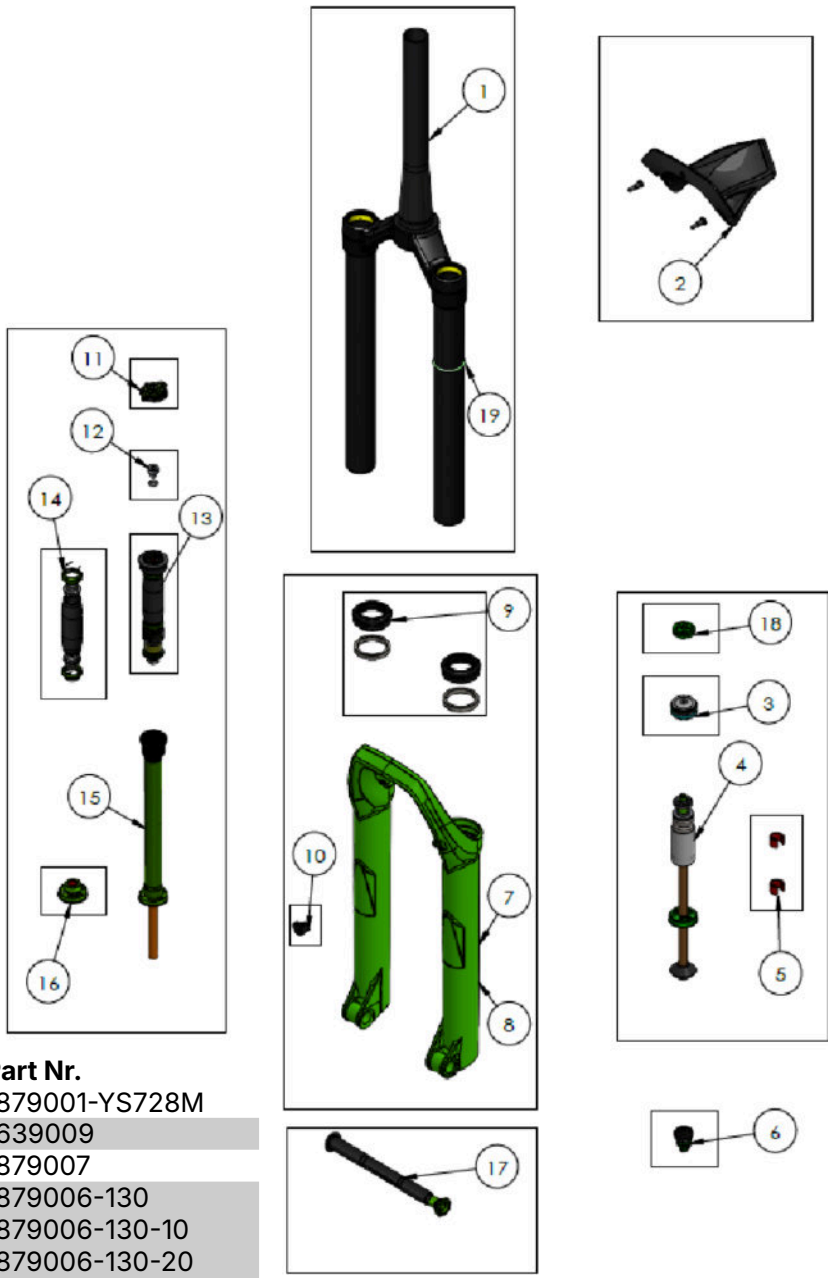

Spare Parts List | 1/1

	Product Name	Part Nr.
1	Upper Assembly Black - Sapphire D1	1879001-YS728M
2	Fender Kit Boost - Sapphire D1	1639009
3	Air Piston Kit - Sapphire D1	1879007
4	Air Shaft Assembly 275 Stock OTT Spring	1879006-130
4	Air Shaft Assembly 275 Light OTT Spring	1879006-130-10
4	Air Shaft Assembly 275 X-Light OTT Spring	1879006-130-20
4	Air Shaft Assembly 29 Stock OTT Spring	1889006-120
4	Air Shaft Assembly 29 Light OTT Spring	1889006-120-10
4	Air Shaft Assembly 29 X-Light OTT Spring	1889006-120-20
5	OTT Travel Reduction Kit	1439017

		Part Nr.
6	Air Spring Foot Nut Assembly	1439012
7	Bottom Case Assembly 275 - Green	1879000-TC704
7	Bottom Case Assembly 275 - Black	1879000-YS727
7	Bottom Case Assembly 275 - Blue	1879000-YS9429
8	Bottom Case Assembly 29 - Green	1889000-TC704
8	Bottom Case Assembly 29 - Black	1889000-YS727
8	Bottom Case Assembly 29 - Blue	1889000-YS9429
9	Seal Kit - Sapphire D1	1879005
10	Cable Guide & Screw	1439020
11	Damper Knob & Detent Kit - Sapphire D1	1879011
12	Bleed Screw & O-Ring	1439019
13	Compression Assembly - Sapphire D1	1879003
14	Bladder Kit - Diamond/Sapphire	1439013
15	Rebound Damper Assembly - Sapphire D1	1879002
16	Damper End Cap - Sapphire D1	1879004
17	Bolted Axle 110×15	1789011
18	Air Cap - Sapphire D1	1631082
19	Travel O-Ring Indicator - 34mm	1871050

SUSPENSION-LAB.COM
Copyright © 2026

Jade | Spare Parts

ONLINE-SHOP

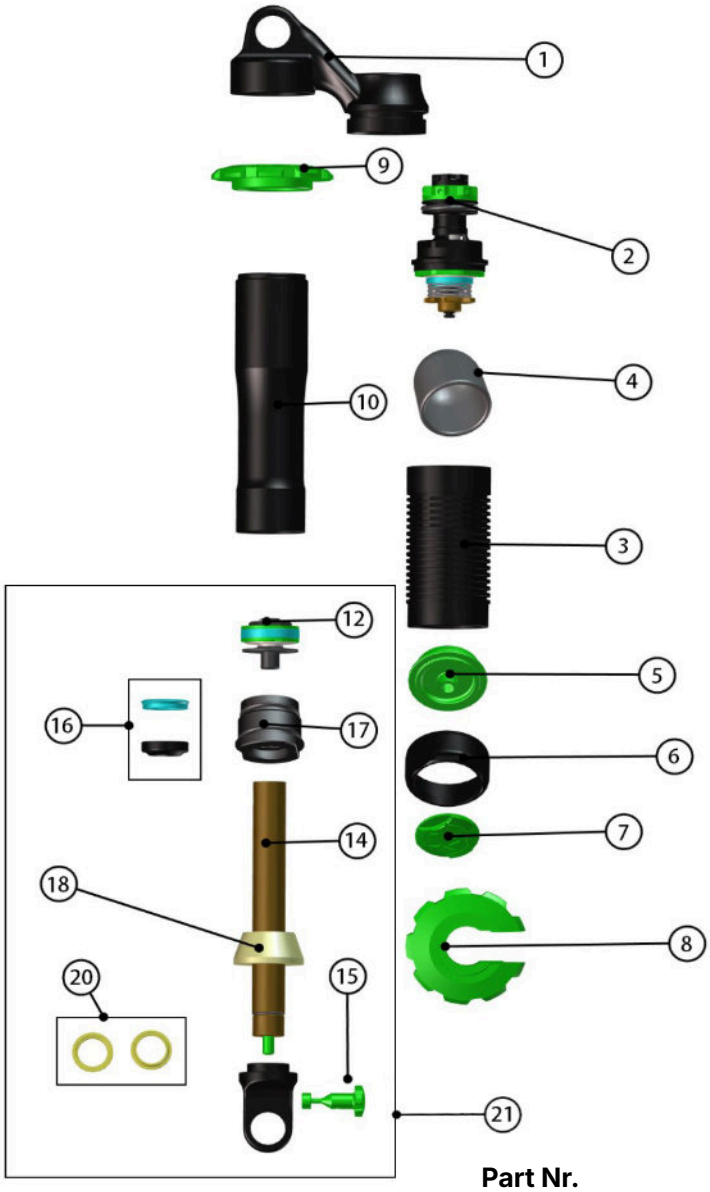

Spare Parts List | 1/1

	Product Name	Part Nr.
1	Housing - Jade	1421010
2	Compression Assembly - Jade	1429002
3	Reservior Body - Jade	1421012
5	Bladder Air Cap - Jade	1421004
6	Air Cap Lock Nut - Jade	1421007
7	Air Cap Jade / Topaz	1421001
8	Spring Clip 0mm Jade / Jade X	1421013
9	Preload Collar Jade / Jade X	1421011
10	Main Body 2.25	1421009-225
10	Main Body 2.75/2.5	1421009-275/250
10	Main Body 3.0 - Jade	1421009-300
10	Main Body 3.5 - Jade	1421009-350
10	Main Body 55 Jade	1421009-55
10	Main Body 65 Jade	1421009-65
10	Main Body 75 - Jade	1421009-75
12	Piston Bolt Group (excl. 3.5") - Jade	1429004
14	14mm Shaft 2.25	1421017-225
14	14mm Shaft 2.5	1421017-250
14	14mm Shaft 2.75	1421017-275
14	14mm Shaft 3.0	1421017-300
14	14mm Shaft 3.5	1421017-350
14	14mm Shaft Metric 50mm	1421017-50
14	14mm Shaft Metric 52.5mm	1421017-52
14	14mm Shaft Metric 55mm	1421017-55
14	14mm Shaft Metric 60mm	1421017-60
14	14mm Shaft Metric 62.5mm	1421017-62
14	14mm Shaft Metric 65mm	1421017-65
14	14mm Shaft Metric 70mm	1421017-70
14	14mm Shaft Metric 75mm	1421017-75
15	Rebound Adjuster Knob - Jade	1421018
18	Bumper - Jade	1421014
20	IGUS DU Bushings Kit	1429020
21	Shaft Assembly Kit 225	1429001-225
21	Shaft Assembly Kit 250	1429001-250
21	Shaft Assembly Kit 275	1429001-275
21	Shaft Assembly Kit 300	1429001-300
	Shaft Eyelet Jade / Jade X Long	1429011
Kit	Seal/Repair Kit - Jade (Includes 4/16/17/18)	1429006

SUSPENSION-LAB.COM
Copyright © 2026

Jade X | Spare Parts

ONLINE-SHOP

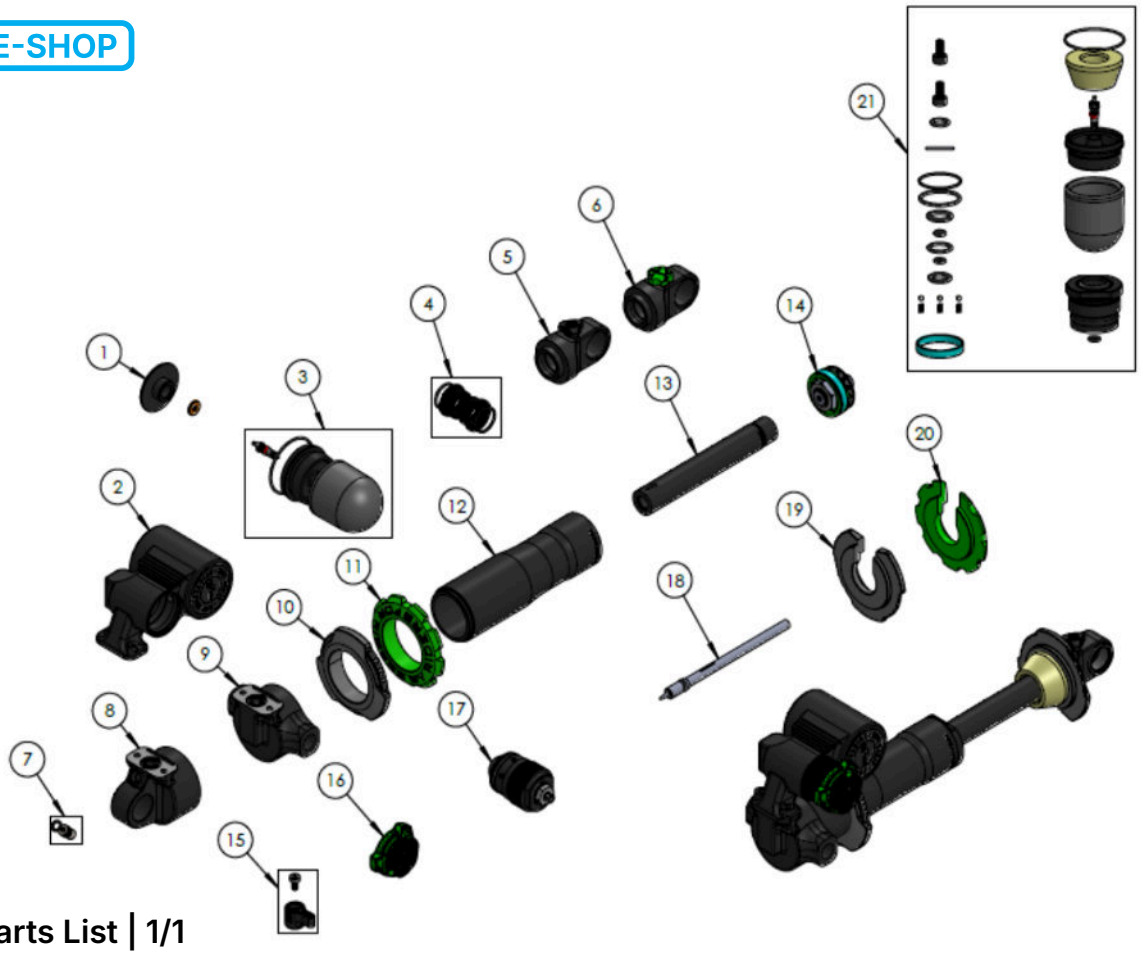

Spare Parts List | 1/1

	Product Name	Part Nr.
1	Air Cap Jade X / Topaz Gen3 / Onyx 38 D3	205-9021
2	Reservior Body - Jade X Core	209-1002-SP
2	Reservior Body - Jade X Prime	233-1002-SP
2	Reservior Body - Jade X Pro	191-1002-SP
3	Bladder Kit	1569012
4	IGUS DU Bushings Kit	1429020
5	Shaft Eyelet - Jade X Prime	233-SP01
6	Shaft Eyelet - Jade X Pro / Core	191-SP01
7	Damper Plug Kit	1569015
8	Upper Housing Eyelet - Jade X	191-1001-SP
9	Upper Housing Trunnion - Jade X	191-1001T-SP
10	Preload Collar - Jade X Prime	233-5001-SP
11	Preload Collar Jade / Jade X	1421011
12	Main Body 2.25 Jade / Jade X	1421009-225
12	Main Body 2.75/2.50 Jade / Jade X	1421009-275/250
12	Main Body 55 Jade / Jade X	1421009-55
12	Main Body 65 Jade / Jade X	1421009-65
13	14mm Shaft 2.25 - Jade X	191-1017-22
13	14mm Shaft 2.50 - Jade X	191-1017-25
13	14mm Shaft Metric 55mm - Jade X	191-1017-55
13	14mm Shaft Metric 65mm - Jade X	191-1017-65
13	14mm Shaft Metric 75mm - Jade X	191-1017-75
14	Piston Bolt Group - Jade X	1429004-33
15	Compression Lever Kit Jade X / Topaz	1839005
16	Compression Knobs - Jade X / Topaz Prime	205-SP01
17	Compression Assembly - Jade X / Topaz Prime	205-SP02
18	HD Rebound Needle 2.25 - Jade X	191-1024-22
18	HD Rebound Needle 2.50 - Jade X	191-1024-25
18	HD Rebound Needle 55mm - Jade X	191-1024-55
18	HD Rebound Needle 65mm - Jade X	191-1024-65
18	HD Rebound Needle 75mm - Jade X	191-1024-75
19	Spring Clip Stroke Reducer -0 - Jade X Prime	233-5002-0-SP
19	Spring Clip Stroke Reducer -2.5mm - Jade X Prime	233-5002-2-SP
19	Spring Clip Stroke Reducer -5mm - Jade X Prime	233-5002-5-SP
19	Spring Clip Stroke Reducer -7.5 - Jade X Prime	233-5002-7-SP
20	Spring Clip 0mm Jade / Jade X	1421013
20	Spring Clip Stroke Reducer -2.5mm - Jade / Jade X	191-1003-2-SP
20	Spring Clip Stroke Reducer -5mm - Jade / Jade X	191-1003-5-SP
20	Spring Clip Stroke Reducer -7.5mm - Jade / Jade X	191-1003-7-SP
21	Seal/Repair Kit - Jade X Prime / Pro / Core	233-SP02

SUSPENSION-LAB.COM
Copyright © 2026

Jade X WP | Spare Parts

ONLINE-SHOP

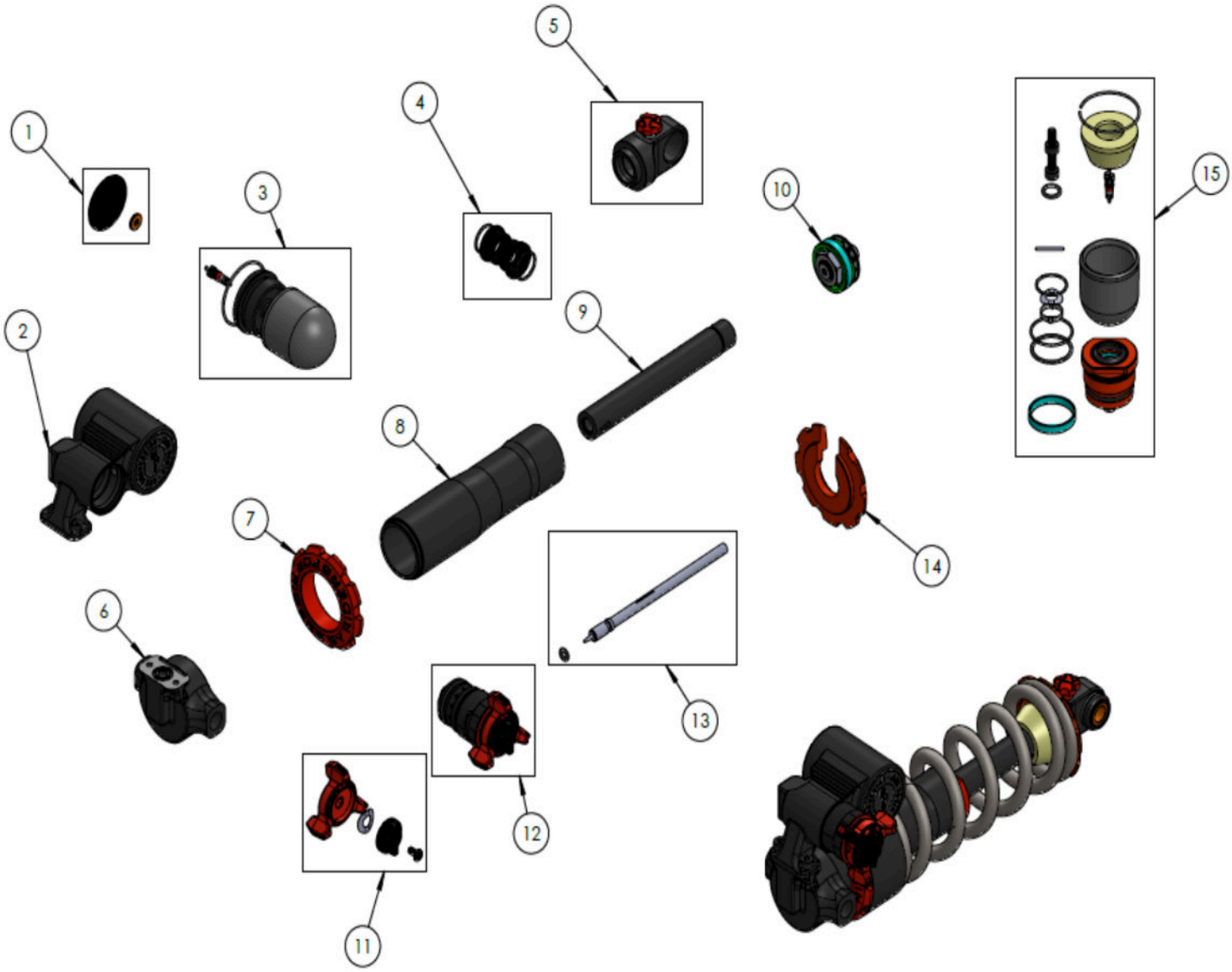

Spare Parts List | 1/1

	Product Name	Part Nr.
1	Air Cap Jade X WP / Topaz Gen3 WP	257-WP03
2	Reservoir Body - Jade X WP	209-1002-WP
3	Bladder Kit	1569012
4	IGUS DU Bushings Kit	1429020
5	Shaft Eyelet - Jade X WP Long	1429011-WP
6	Upper Housing Trunnion Jade X	191-1001T-SP
7	Preload Collar - Jade X WP	1421011-WP
8	Main Body 65 Jade / Jade X	1421009-65
9	14mm Shaft Metric 65mm - Jade X	191-1017-65
10	Piston Bolt Group - Jade X WP	1429004-30
11	Compression Knob Kit Jade X WP / Topaz Gen3 WP	257-WP01
12	Compression Assembly Jade X WP / Topaz Gen3 WP	257-9001-WP
13	HD Rebound Needle 65mm - Jade X / WP	191-1024-65
14	Spring Clip 0mm - Jade X WP	1421013-10-WP
15	Seal/ Repair Kit - Jade X WP	191-9010-10-WP

SUSPENSION-LAB.COM
Copyright © 2026

Topaz | Spare Parts

ONLINE-SHOP

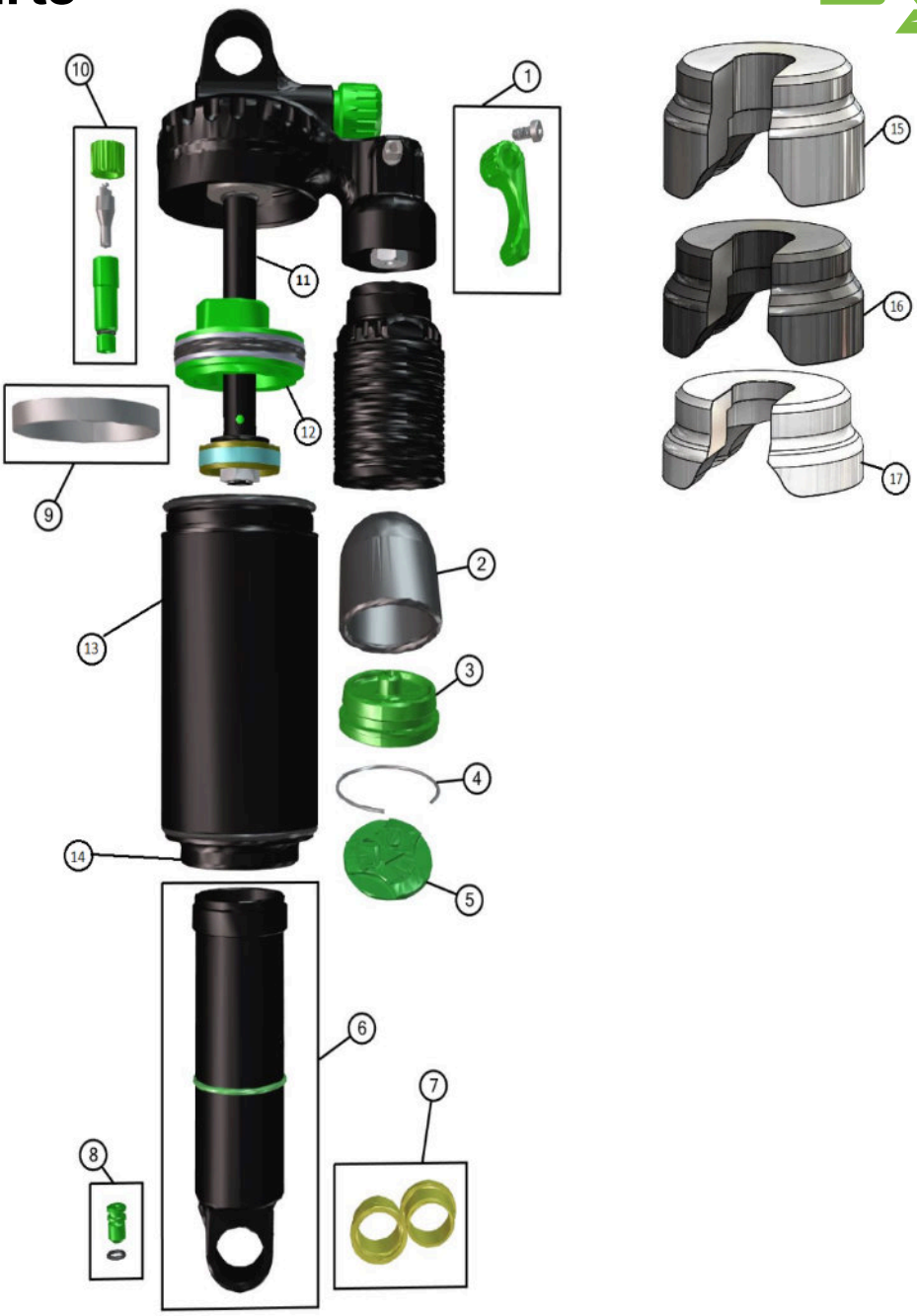

Spare Parts List | 1/2

	Product Name	Part Nr.
1	Compression Lever Kit - Topaz	1569009
1	Compression Lever Kit Jade X / Topaz	1839005
2	Bladder Kit (Contains 2/3/4)	1569012
5	Air Cap Jade / Topaz	1421001
6	Damper Body 165×45/40 - Topaz	1561007-80
6	Damper Body 190×50 - Topaz	1561007-30
6	Damper Body 197×47.6 - Topaz Stumpy	1561007-30S
6	Damper Body 200×57 - Topaz	1561007-20
6	Damper Body 210×55/50 - Topaz	1561007-50
6	Damper Body 216×57 - Topaz Enduro	1561007-60S
6	Damper Body 216×63 - Topaz	1561007-10
6	Damper Body 230×65/60 - Topaz	1561007-40
7	IGUS DU Bushings Kit	1429020
8	Damper Plug Kit	1569015
9	A.V.R Tuning Kit Topaz	1569013
10	Air Valve Kit	1569007
v		

SUSPENSION-LAB.COM
Copyright © 2026

Spare Parts List | 2/2

^	Product Name	Part Nr.
11	Damper Shaft 190×50 - Topaz	1561010-30
11	Damper Shaft 200×57/50 - Topaz	1561010-20
11	Damper Shaft 216×63.5 - Topaz	1561010-10
11	Damper Shaft 35/30 - Topaz	1561010-90
11	Damper Shaft 45/40 - Topaz	1561010-80
11	Damper Shaft 55/50 - Topaz	1561010-50
11	Damper Shaft 65/60 - Topaz	1561010-40
12	Damper End Cap - Topaz	1839004
13	Air Sleeve 190×50 Air Sleeve - Topaz	1561055-30-SP
13	Air Sleeve 200×57/50 - Topaz	1561055-20-SP
13	Air Sleeve 216×63.5 - Topaz	1561055-10-SP
13	Air Sleeve 45/40mm HVN Topaz / Topaz 2	1561055-45H-SP
13	Air Sleeve 45/40mm STD Topaz	1561055-80-SP
13	Air Sleeve 55/50mm HVN Topaz / Topaz 2	1561055-55H-SP
13	Air Sleeve 55/50mm STD Topaz	1561055-50-SP
13	Air Sleeve 65/60mm HVN Topaz / Topaz 2	1561055-65H-SP
13	Air Sleeve 65/60mm STD Topaz	1561055-40-SP
14	Air Canister 190×50 - Topaz	1561054-30-SP
14	Air Canister 200×57 - Topaz	1561054-20-SP
14	Air Canister 216×63.5 - Topaz	1561054-10-SP
14	Air Canister 45mm - Topaz	1561054-80-SP
14	Air Canister 45mm HVN - Topaz / Topaz 2	1561054-45HVN-SP
14	Air Canister55mm - Topaz	1561054-50-SP
14	Air Canister 55mm HVN - Topaz / Topaz 2	1561054-55HVN-SP
14	Air Canister 65mm - Topaz	1561054-40-SP
14	Air Canister 65mm HVN - Topaz / Topaz 2	1561054-65HVN-SP
15	7.5mm Travel Spacer - Topaz	1561059-7
16	5mm Travel Spacer - Topaz	1561059-5
17	2.5mm Travel Spacer - Topaz	1561059-2
	Air Canister Service Kit - Topaz	1569010
	Damper Rebuild Kit - Topaz	1569008
	Rebound Assembly Topaz / Topaz 2	1569002-SP
	Travel indictor O-Ring - Topaz	RAA130

SUSPENSION-LAB.COM
Copyright © 2026

Topaz WP | Spare Parts

ONLINE-SHOP

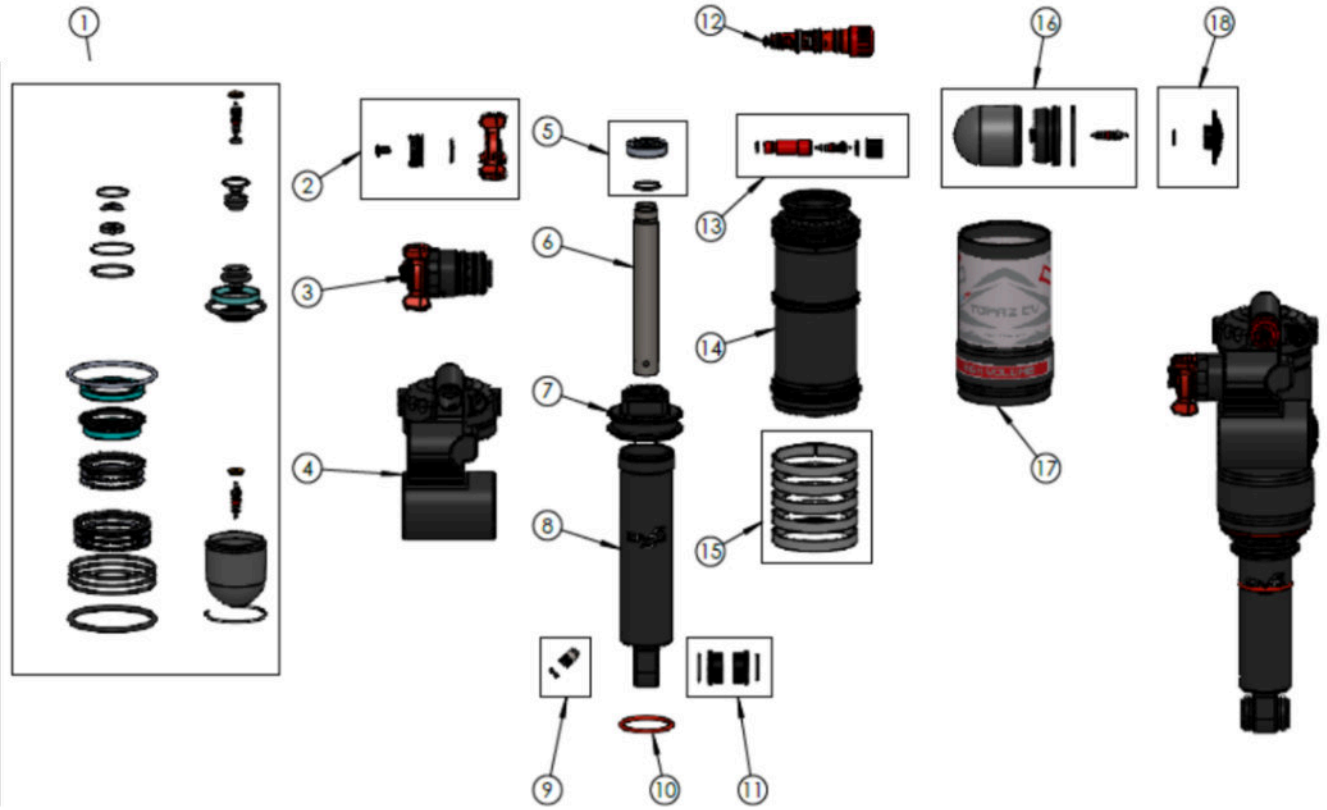

Spare Parts List | 1/1

	Product Name	Part Nr.
1	Complete Seal/Repair Kit - Topaz Gen3 WP	223-9008-WP
2	Compression Knob Kit Jade X-WP / Topaz Gen3-WP	257-WP01
3	Compression Assembly Jade X-WP / Topaz Gen3-WP	257-9001-WP
4	Housing Trunnion - Topaz Gen3 WP	223-1002T-WP
5	5mm Travel Spacer Topaz Gen3	223-9006-5
6	Damper Shaft 65/60 - Topaz	223-1005-65
7	Damper End Cap - Topaz	223-9004
8	230×65/60 Damper Body - Topaz	223-1013-65
9	Damper Plug Kit	1569015
10	Travel Indictor O-ring - Topaz Gen3 WP	RAA130-10-WP
11	IGUS DU Bushings Kit	1429020
12	Rebound Assembly - Topaz Gen3 WP	268-9004-WP
13	Air Valve Kit - Topaz Gen3 WP	1569007-WP
14	Air Canister 65mm - Topaz	223-1007-65-SP
15	A.V.R Tuning Kit Topaz	1569013
15	Bladder Kit	1569012
17	Air Sleeve 65/60 HVN - Topaz Gen3 WP	268-WP01
18	Air Cap Jade X-WP / Topaz Gen3-WP	257-WP03

SUSPENSION-LAB.COM
Copyright © 2026

Topaz Gen3 | Spare Parts

ONLINE-SHOP

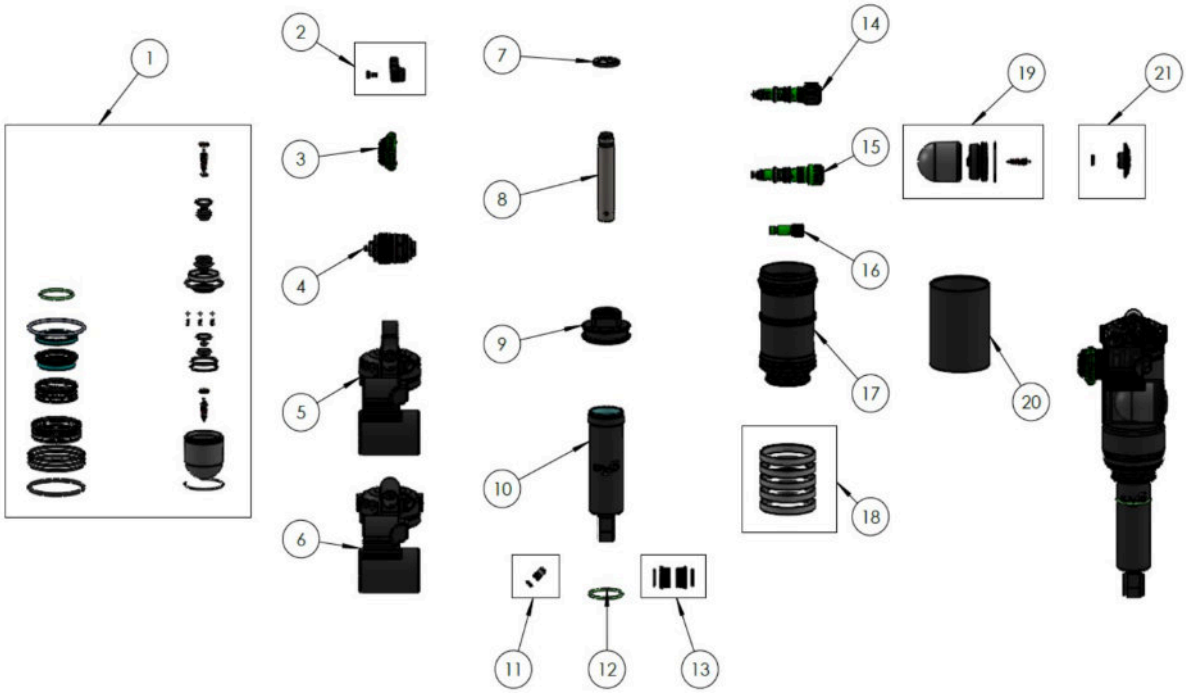

Spare Parts List | 1/1

	Product Name	Part Nr.
1	Complete Rebuild Kit - Topaz Gen3	225-9008-SP
2	Compression Lever Kit Jade X / Topaz	1839005
3	Compression Knobs - Jade X / Topaz Prime	205-SP01
4	Compression Assembly - Jade X / Topaz Prime	205-SP02
5	Housing Eyelet - Topaz Gen3 Core	224-1002-SP
5	Housing Eyelet - Topaz Gen3 Prime	225-1002-SP
5	Housing Eyelet - Topaz Gen3 Pro	223-1002-SP
6	Housing Trunnion - Topaz Gen3 Core	224-1002T-SP
6	Housing Trunnion - Topaz Gen3 Prime	225-1002T-SP
6	Housing Trunnion - Topaz Gen3 Pro	223-1002T-SP
7	2.5mm Travel Spacer - Topaz Gen3	223-9006-2
7	5mm Travel Spacer Topaz Gen3	223-9006-5
7	7.5mm Travel Spacer - Topaz Gen3	223-9006-7
8	Damper Shaft 45/40 - Topaz Gen3	223-1005-45
8	Damper Shaft 55/50 - Topaz Gen3	223-1005-55
8	Damper Shaft 65/60 - Topaz	223-1005-65
9	Damper End Cap - Topaz	223-9004
10	165×45/40 Damper Body - Topaz Gen3	223-1013-45
10	210×55/50 Damper Body - Topaz Gen3	223-1013-55
10	230×65/60 Damper Body - Topaz	223-1013-65
11	Damper Plug Kit	1569015
12	Travel indictor O-Ring - Topaz	RAA130
13	IGUS DU Bushings Kit	1429020
14	Rebound Assembly - Topaz Gen3 Prime	225-4000-SP
15	Rebound Assembly Topaz / Topaz Gen3 Pro / Core	1569002-SP
16	Air Valve Kit	1569007
17	Air Canister 45mm - Topaz Gen3	223-1007-45-SP
17	Air Canister 55mm - Topaz Gen3	223-1007-55-SP
17	Air Canister 65mm - Topaz	223-1007-65-SP
18	A.V.R Tuning Kit Topaz	1569013
19	Bladder Kit	1569012
20	Air Sleeve 45/40mm HVN Topaz / Topaz Gen3	1561055-45H-SP
20	Air Sleeve 45/40mm STD Topaz	1561055-80-SP
20	Air Sleeve 55/50mm HVN Topaz / Topaz Gen3	1561055-55H-SP
20	Air Sleeve 55/50mm STD Topaz	1561055-50-SP
20	Air Sleeve 65/60mm STD Topaz	1561055-40-SP
20	Air Sleeve 65/60mm HVN Topaz / Topaz Gen3	1561055-65H-SP
21	Air Cap Jade X / Topaz Gen3 / Onyx 38 D3	205-9021

SUSPENSION-LAB.COM
Copyright © 2026